A-12110

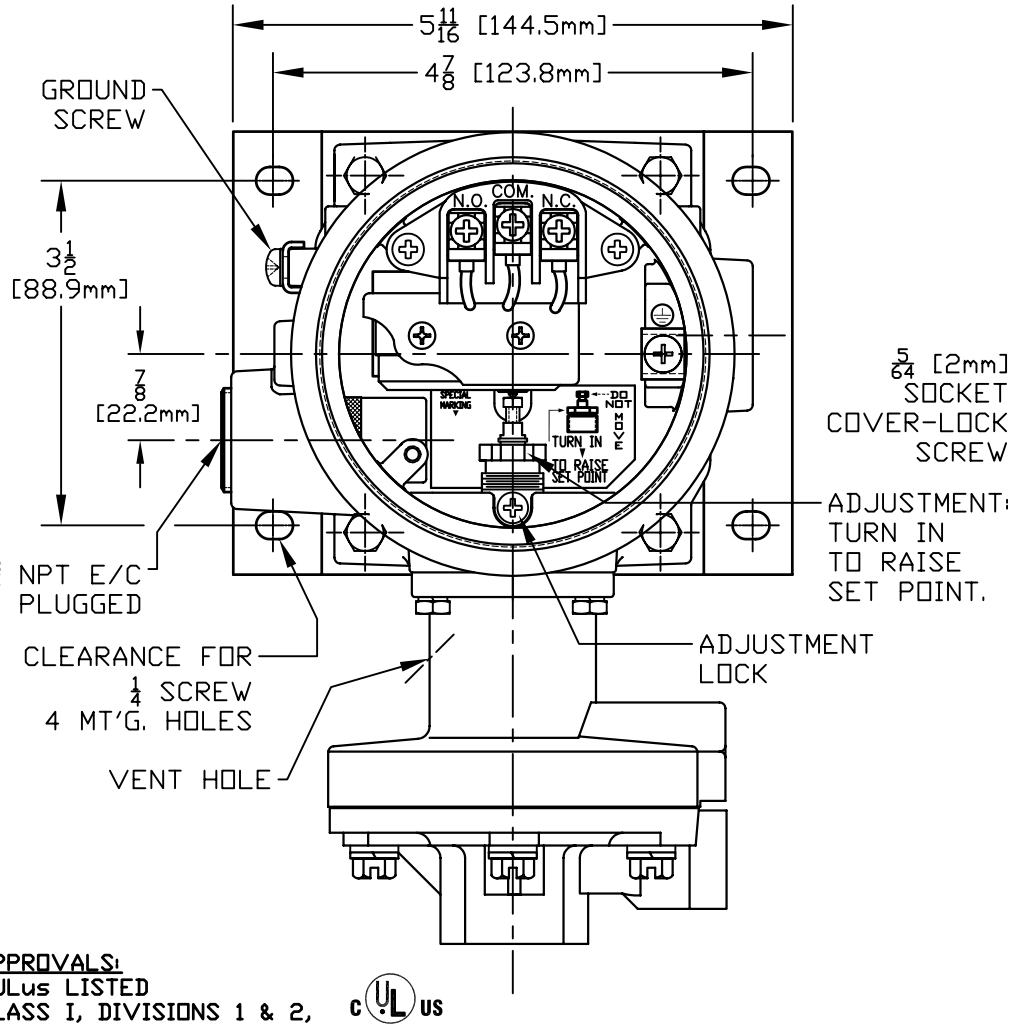

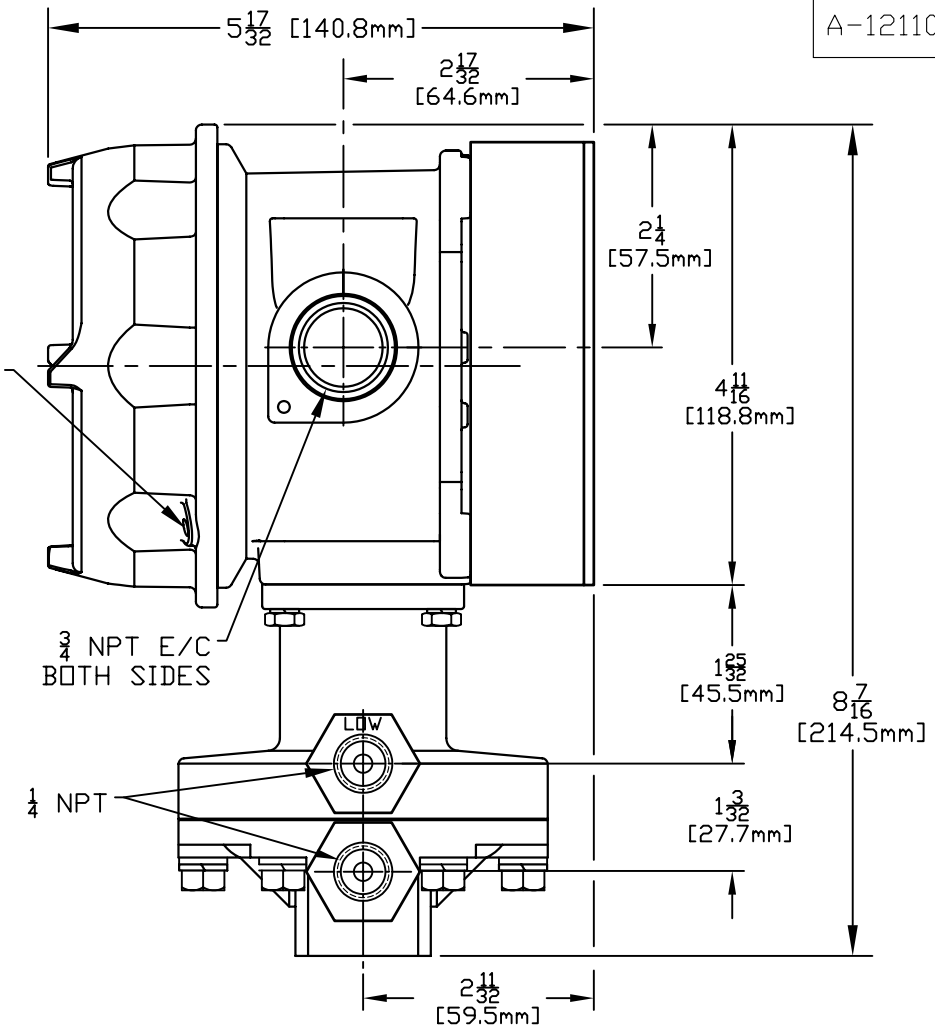

APPROVALS:
cULus LISTED
CLASS I, DIVISIONS 1 & 2, GROUPS B, C & D
CLASS II, DIVISIONS 1 & 2, GROUPS E, F & G
CLASS III
-50°C ≤ Tamb. ≤ +71°C
CLASS I, ZONE 1, GROUP IIB + H_2 T6
ENCLOSURE TYPE 4X, 7, 9

CE 0539 ATEX APPROVED
Ex II 2 G/D EEx d IIC T6
-40°C ≤ Tamb. ≤ +71°C
IP66

CE COMPLIANT TO APPLICABLE DIRECTIVE(S)

I & M SHEET IMP120

MODEL NO.	ADJUSTABLE RANGE psi	ADJUSTABLE RANGE bar
559	10 TO 100	0.7 TO 6.9
457	3 TO 30	0.2 TO 2.1
456	2 TO 20	137.9 TO 1379 mbar
455	5 TO 80"W.C.D.	12.4 TO 199.1 mbar

LOW END OF RANGE ON FALL
HIGH END OF RANGE ON RISE

SYM	DESCRIPTION	DATE	DWN	APPD
V	DELETED EXTRA 1/4 NPT DIM. FROM BOTTOM OF ASSY. ECN#E2259	4-23-07	SR	LK
U	REPLACED CENELEC APPROVAL WITH ATEX APPROVAL. ECN#E0368	6-17-03	S.R.	LK
T	CONVERTED kPa ADJUSTABLE RANGE TO bar. Psi RANGE FOR MODEL 455 WAS: 2 TO 80"W.C.D. ECN#E0037	9-10-02	S.R.	LK
S	ADDED CENELEC & CE APPROVALS. ECN#E0009	8-27-02	S.R.	LK
R	UPDATED ENCLOSURE & COVER. ECN#C9734	2/27/02	S.R.	LK
P	REVISED INSTRUCTION LABEL. ECN#C6557	7-31-97	P.W.	J.S.M.
N	REDRAWN PER REDESIGN. ECN#C5853	10-31-96	S.R.	JJM

REVISIONS

ORIGINAL DATE 9-17-86
DRWN P. WEILER
CHKD A.J. FLECCA
APPD A. MINASSIAN

UNLESS OTHERWISE SPECIFIED DIMENSIONS ARE IN INCHES

DO NOT SCALE THIS DRAWING

TITLE
J120K
455 TO 457
& 559

SCALE 1:2

UE
UNITED ELECTRIC CONTROLS COMPANY
WATERTOWN * MASSACHUSETTS

DF001
REV. B

DWG NO
A-12110