A-12817

WIRE COLOR CODING
SWITCH #1
BROWN ——— COM.
RED ——— N.C.
BLUE ——— N.O.
GREEN ——— GND.

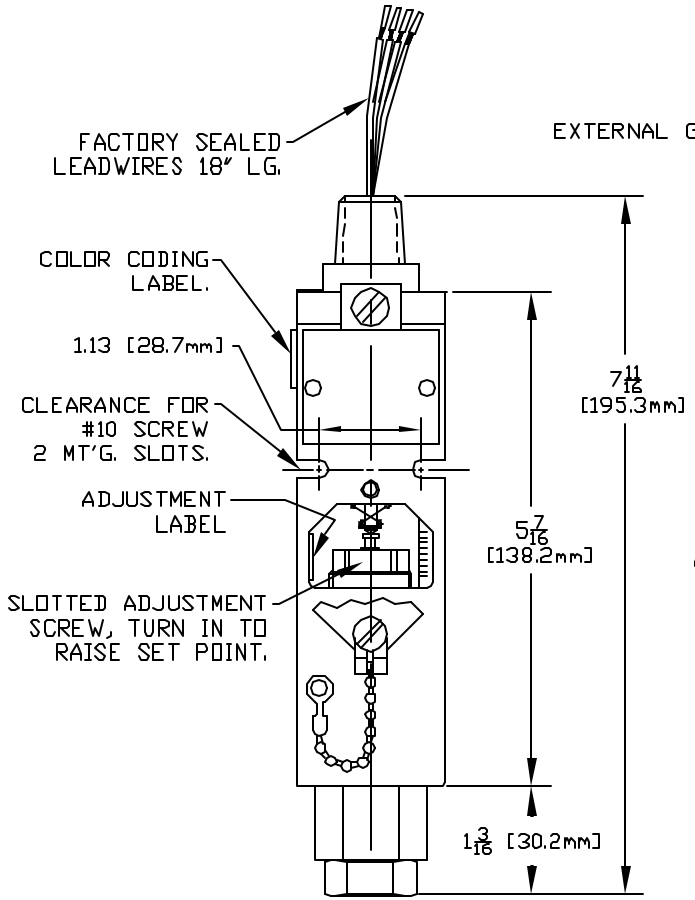

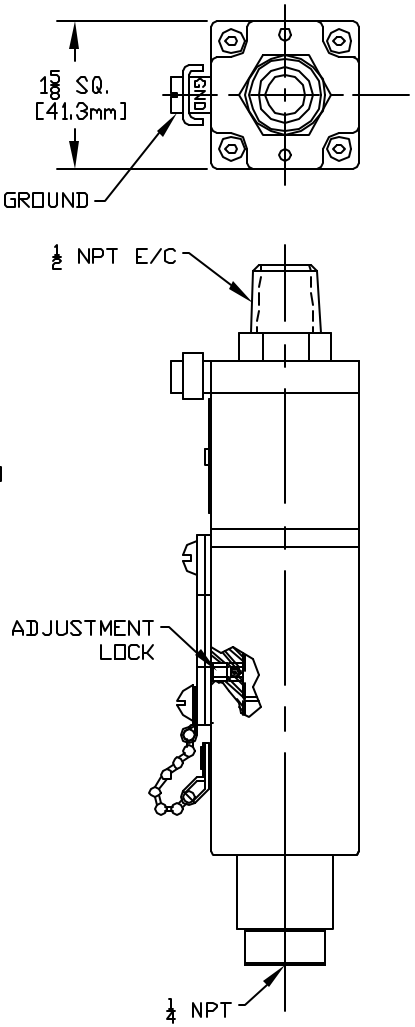

UL LISTED, CSA CERTIFIED
SNAP SWITCH ASSEMBLY APPROVED FOR USE IN HAZARDOUS LOCATIONS. DIVISIONS 1 & 2, CLASS I GROUPS A, B, C & D CLASS II GROUPS E, F, & G.

CENELEC APPROVED:
EN50 014
EN50 018
EExdIICT6

I & M SHEET IM119.

MODEL NO.	ADJUSTABLE RANGE psi	ADJUSTABLE RANGE bar
376	25 TO 500	1.7 TO 34.5
361	20 TO 300	1.4 TO 20.7
358	15 TO 200	1.0 TO 13.8

LOW END OF RANGE ON FALL
HIGH END OF RANGE ON RISE

SYM	DESCRIPTION	DATE	DWN	APPD
H	CHANGED kPa TO bar. ECN#E0045	10-23-02	S.R.	H.N.
G	ADDED CENELEC APPROVED TO SPEC. ECN#C4349	2-8-95	P.V.	N.T.
F	UPDATED RANGES PER ECN#C3529	8-25-94	P.V.	A.M.
E	REV. "E" RING QTY & ADDED "O" RING ON "M" DWG. ECN#C1212	3-31-92	A.E.	A.M.
D1	NEMA 4 IP66 DELETED, ADDED CLASS I. ECN#C0990	12-11-91	P.W.	L.K.

REVISIONS

ORIGINAL DATE 8-16-88
DRWN A. EBALO
CHKD PETER WEILER
APPD L. KHATCHADOURIAN

UNLESS OTHERWISE SPECIFIED DIMENSIONS ARE IN INCHES

DO NOT SCALE THIS DRAWING

TITLE H119

SCALE HALF

DF001D

UNITED ELECTRIC CONTROLS COMPANY
WATERTOWN * MASSACHUSETTS

DWG NO A-12817